Overview of DOE's Vehicle Systems Analysis Tools with a Focus on Emissions Modeling

Tony Markel
National Renewable Energy Laboratory

Aymeric Rousseau
Argonne National Laboratory

DOE Crosscut Workshop on Lean Exhaust Emissions Reduction Simulation
Oak Ridge National Laboratory
May 7-8, 2001

Outline

- Overview of Existing DOE Vehicle Systems Models
- Details of Engine and Emission Control Models
  - ADVISOR
  - PSAT
- Future Modeling Pathways

DOE's Existing Vehicle Modeling Tools

- ADVISOR v3.1
  - initiated development in 1994 to provide analysis support to DOE
  - first distributed via the internet in September of 1998
  - currently >3200 individuals have downloaded ADVISOR (~700 have downloaded v3.1)
- PSAT v4.1
  - initially developed in support of USCAR, NASA, EPA, and DOE
  - support and development moved from SWRI to Argonne National Laboratory in 1999
  - proprietary version available to PNGV partners, non-proprietary version to other selected users
  - currently ~100 active users (25 companies or universities)

Modeling Approach

- Common Attributes
  - Models interpolate/extrapolate operating points from steady state experimental data tables
  - Library structure for model development
  - Similar Graphical User Interfaces (GUIs)
- Primary Differences
  - ADVISOR
    - Backward-facing ---- determines the component load profiles by working backward from the road to the power plant
  - PSAT
    - Forward-facing ---- driver command determined based on road load profile, component commands determined by central controller

Three Main GUI Screens (Roadmap)

Vehicle Input

Simulation Setup

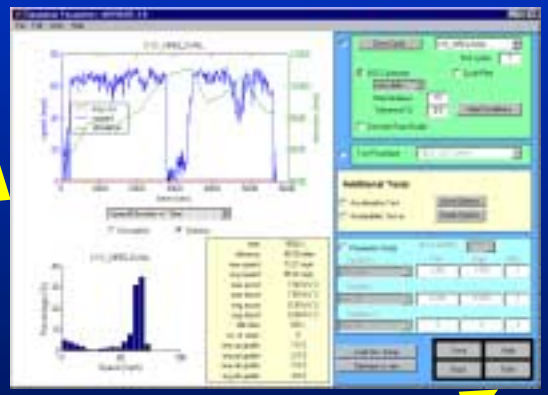

Results

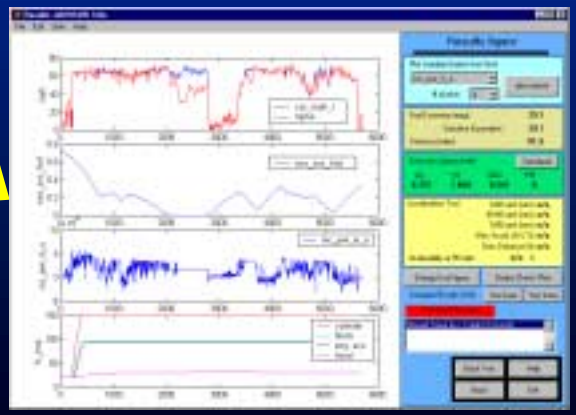

Basic Structure (models)

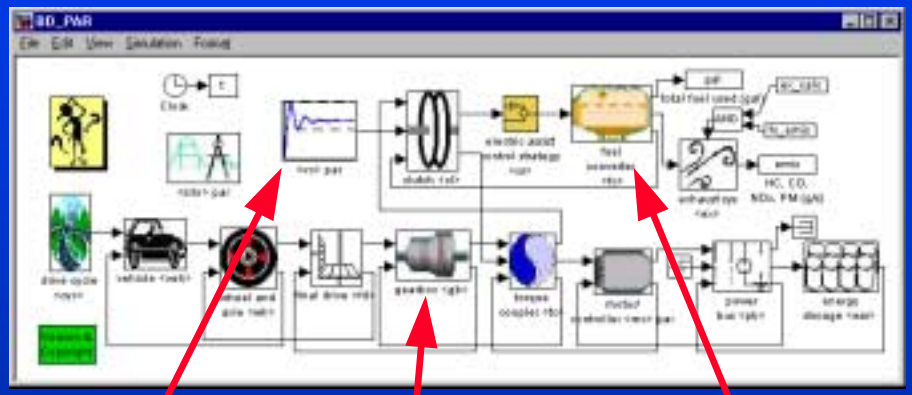

Block Diagram

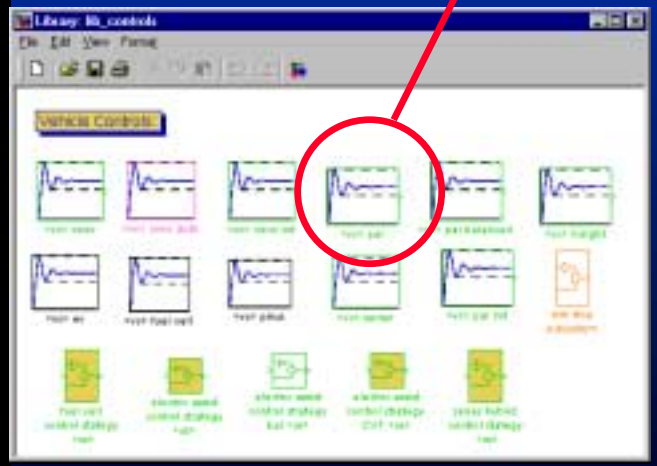

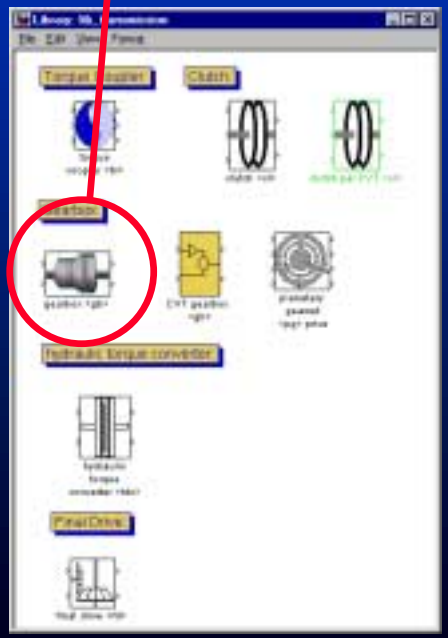

Libraries

Basic Structure (database)

Block Diagram

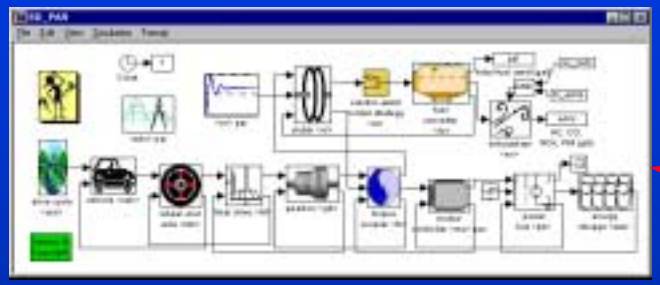

GUI

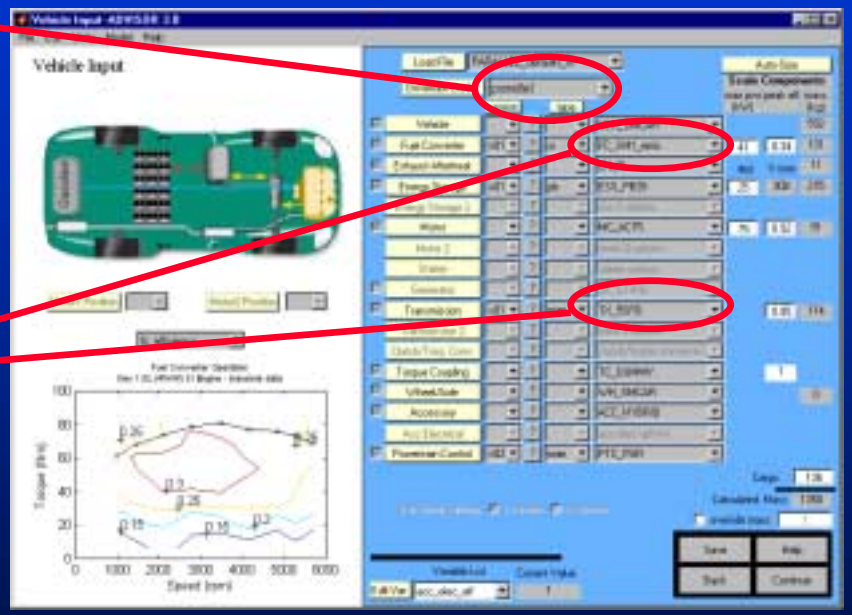

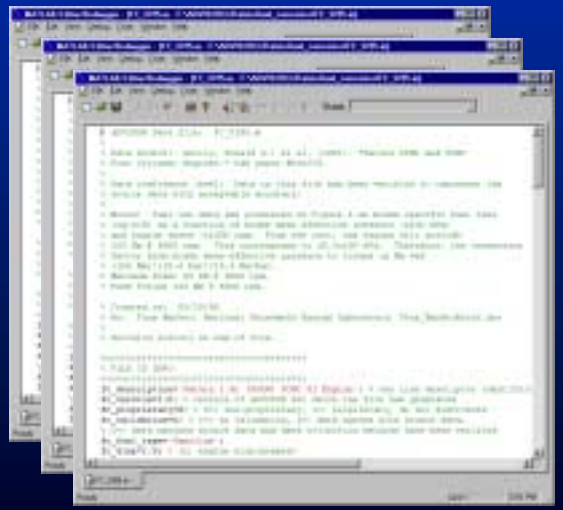

Data Files

Basic Engine and Emissions Model Structure

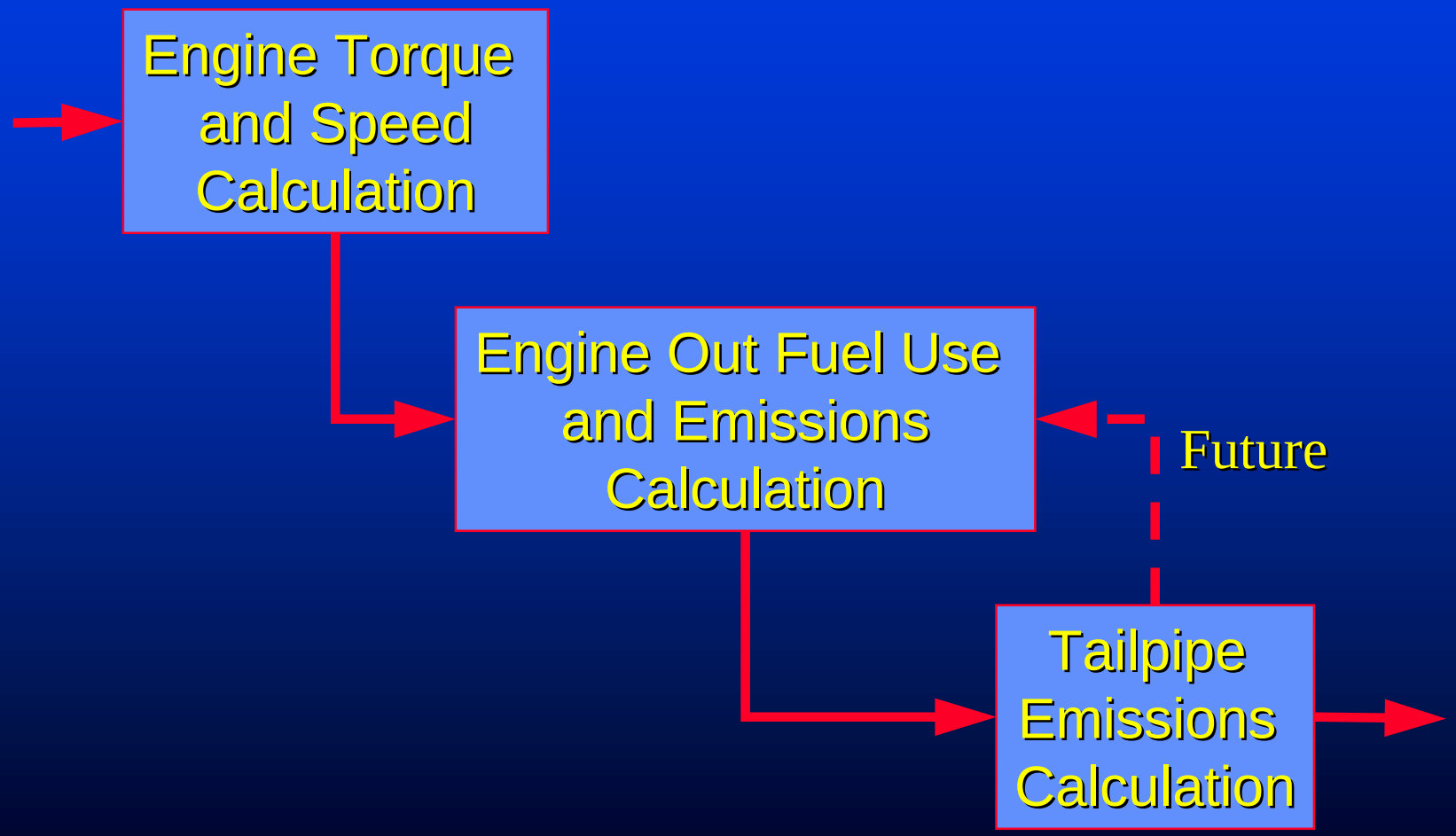

Outline

- Overview of Existing DOE Vehicle Systems Models
- Details of Engine and Emission Control Models
  - ADVISOR
  - PSAT
- Future Modeling Pathways

ADVISOR - Temperature Corrected Engine Out Fuel Use and Emissions Calculations

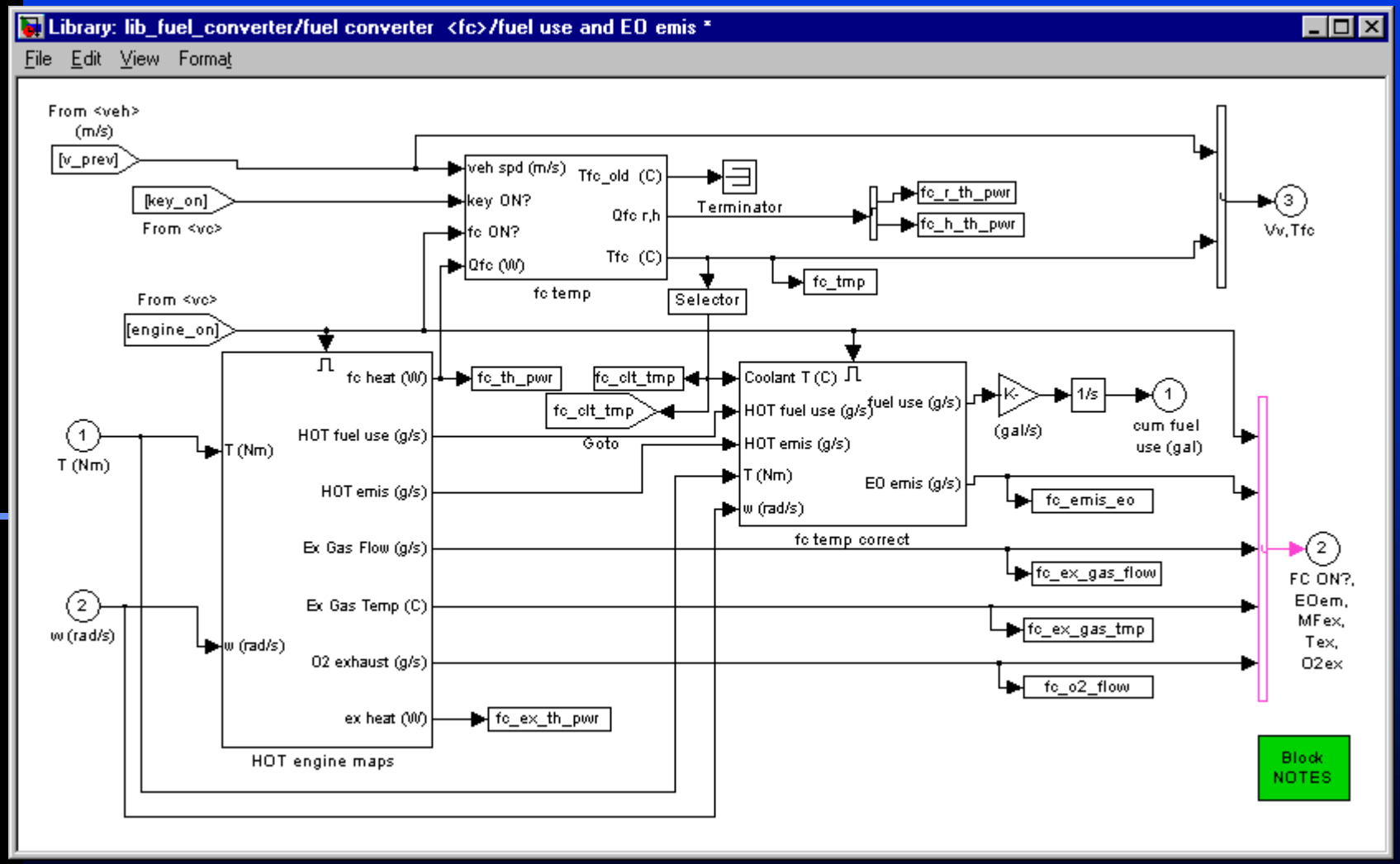

ADVISOR - Engine Out Fuel Use and Emissions Calculation - Sub Models

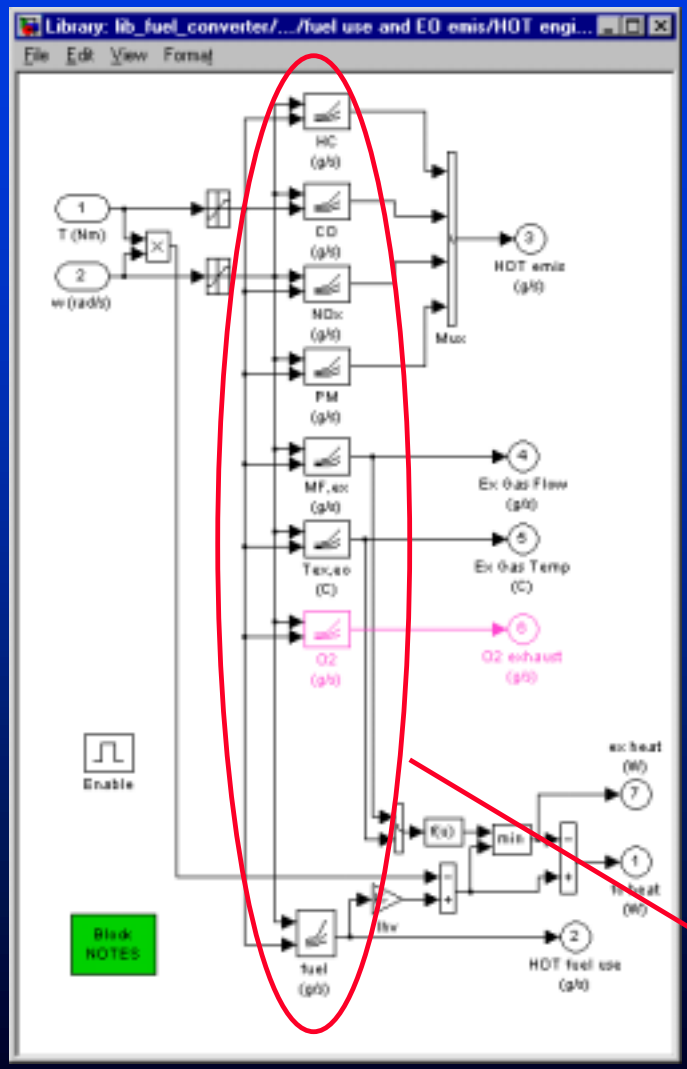

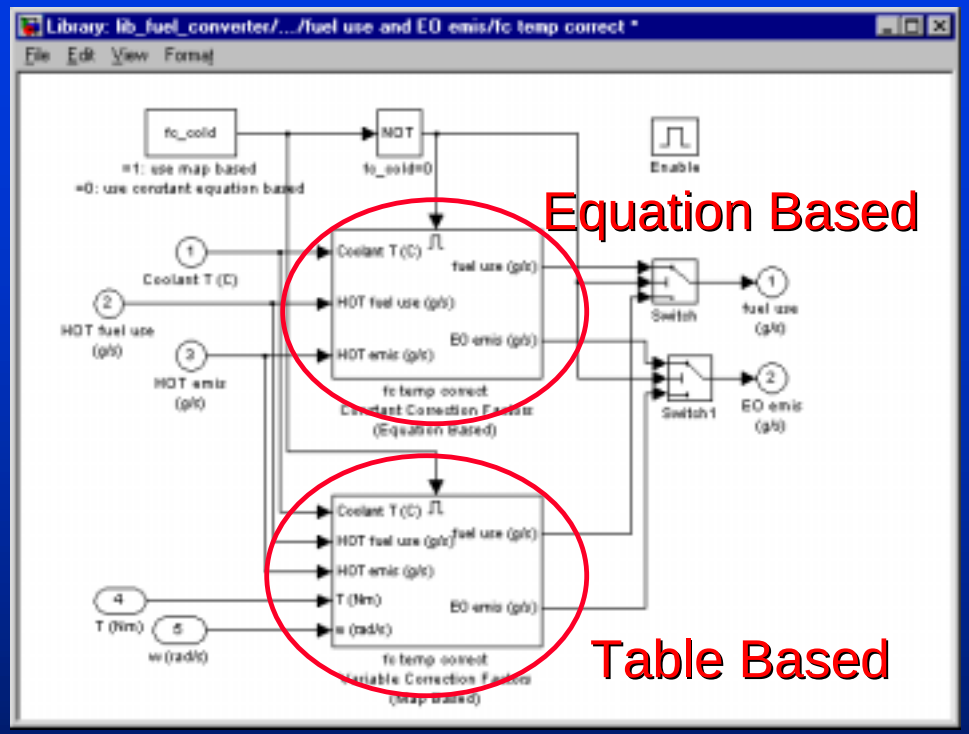

Temperature Corrections

Table Interpolations

ADVISOR - Engine Thermal Model

- Multi-node thermal network
- Parameterized for flexibility
- Includes conduction, radiation, and convection

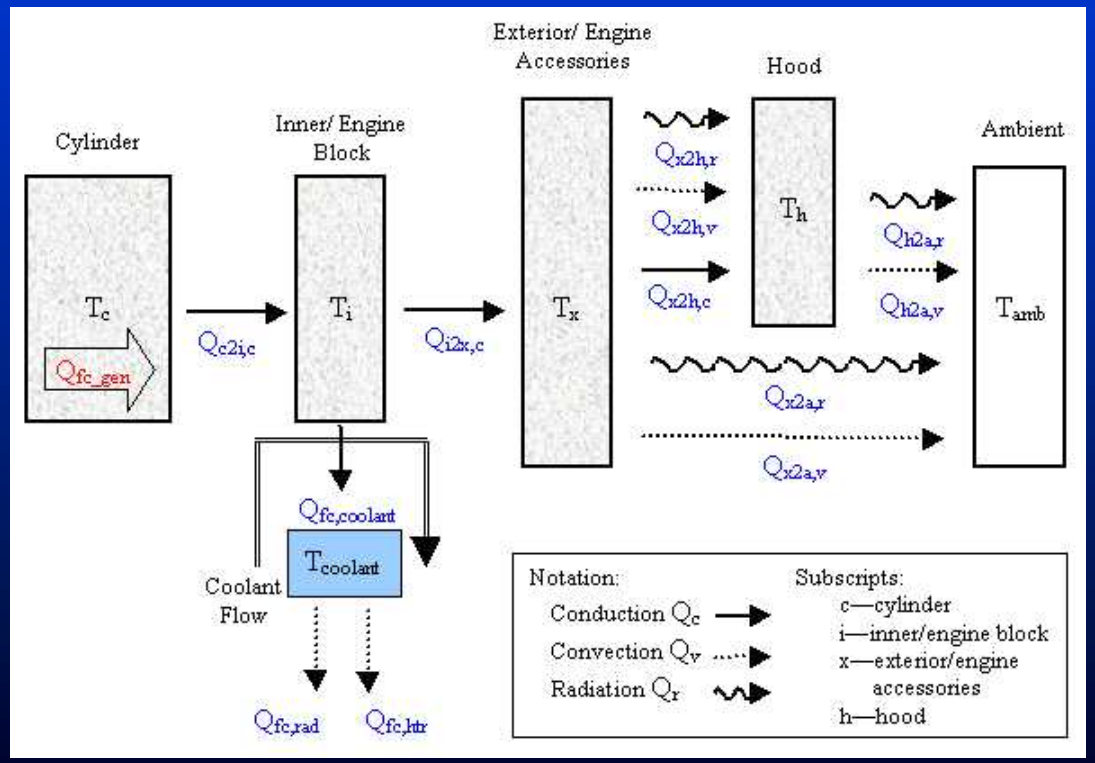

ADVISOR - Emissions Control Model Structure

- Three main sub-models

Gas heat generation and transfer

Conversion efficiencies

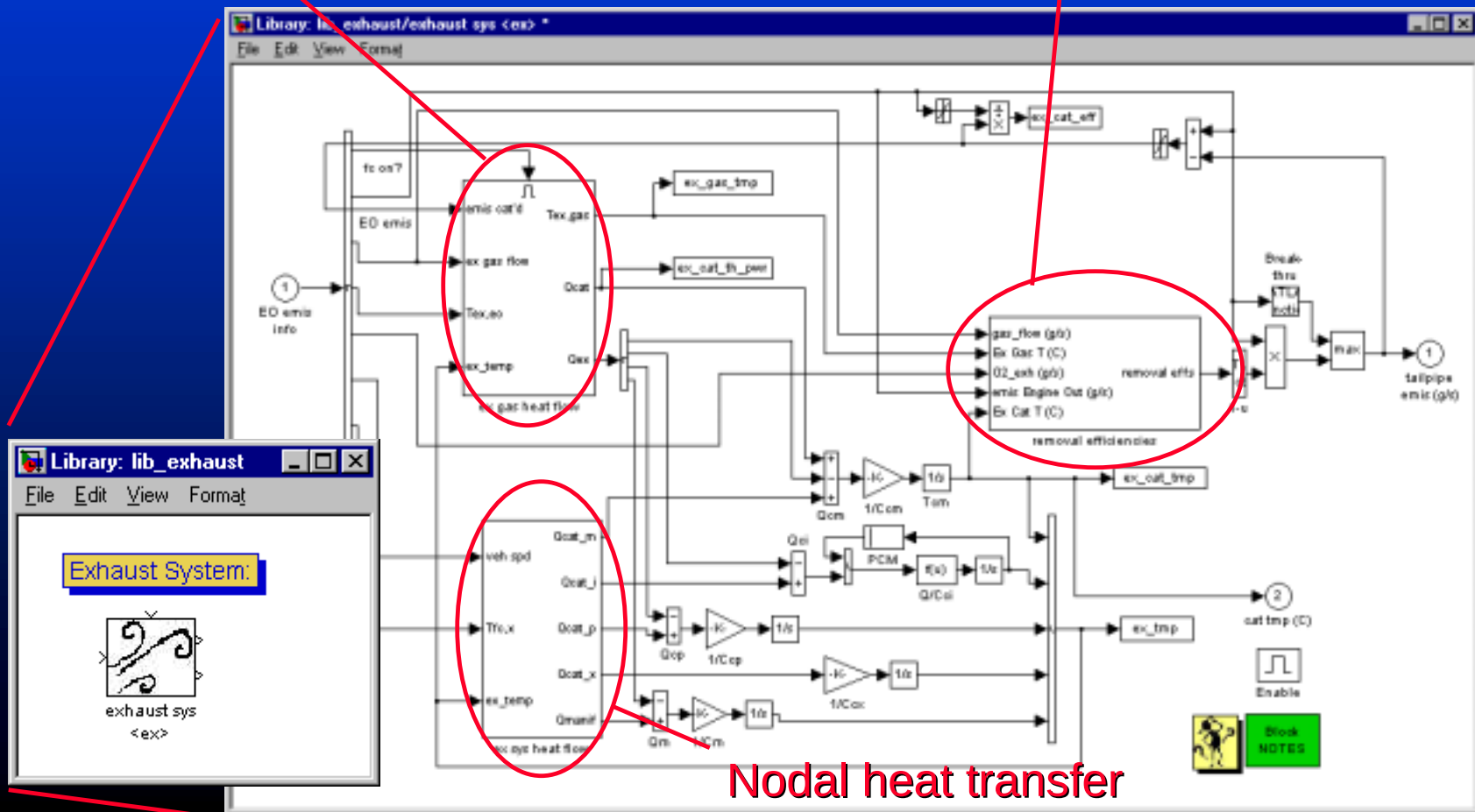

Nodal heat transfer

ADVISOR
Emissions Control - Conversion Efficiencies

- Basic Correlation
  - conv eff = f(Cat. Temp)
- ORNL Correlation
  - conv eff = f(gas flow, gas temp, O2 flow)

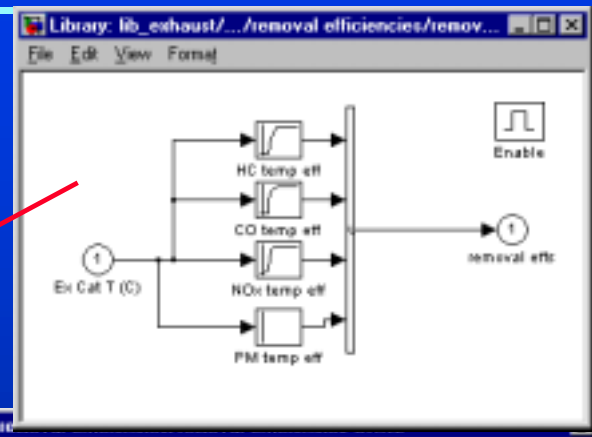

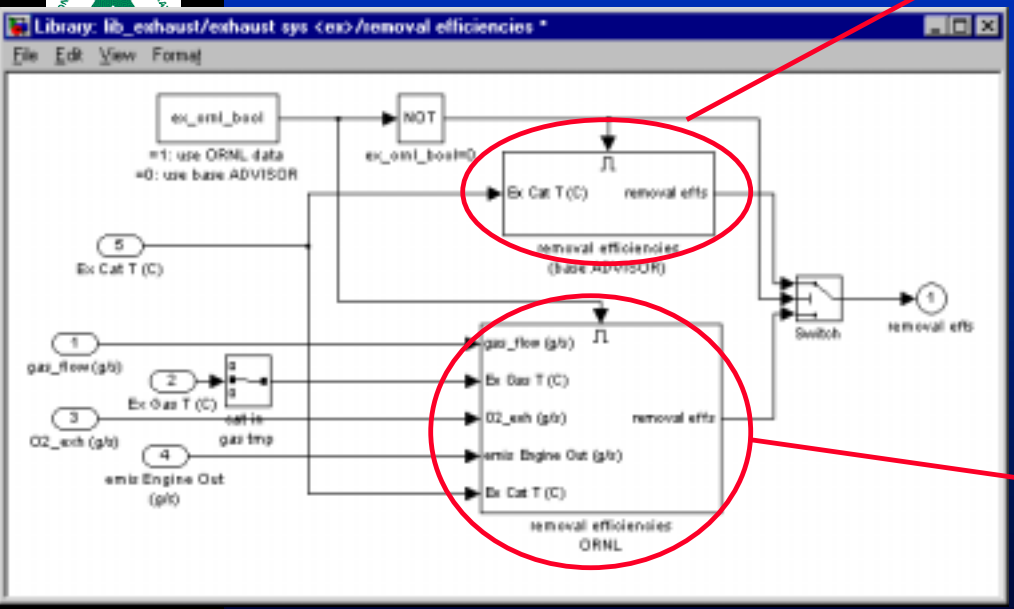

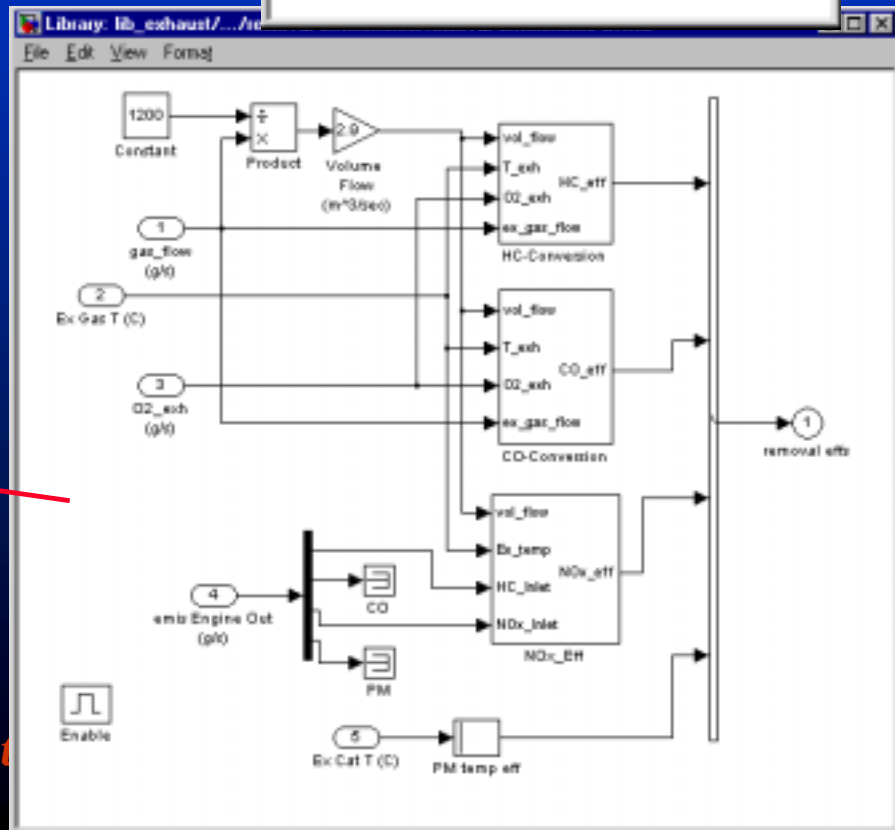

ORNL Emissions Control Correlation

- ORNL experimental data used to generate conversion efficiency relationships
- ORNL developed models incorporated into ADVISOR
- Represents diesel oxidation catalyst and diesel particulate filter devices
- Future improvements include thermal transient (warm-up) trend accounting
- Simulink allows simple integration of models of varying levels of complexity

ADVISOR - Catalyst Thermal Model

- Multi-node thermal network
- Parameterized for flexibility
- Includes conduction, radiation, convection, and catalysis heat generation

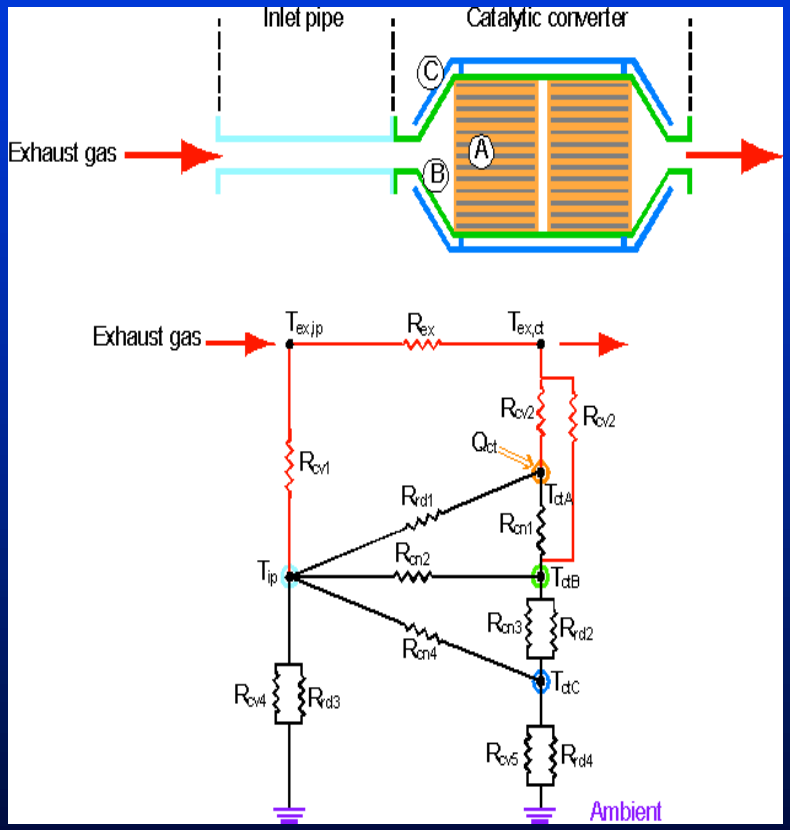

ADVISOR Engine Data Flow

Input
- Required torque and speed

Model

Output
- Nodal engine temperatures
- Temperature corrected fuel use and emissions
- Achievable torque and speed

Parameters
- Steady-state fuel use, emissions, exhaust flow, exhaust temp indexed by torque and speed and temperature
- Performance limits
- Nodal masses and thermal properties

ADVISOR Emissions Control Data Flow

Input

- Nodal engine temperatures
- Temperature corrected fuel use and emissions
- Vehicle speed

Model

Output

- Nodal catalyst temperatures
- Tailpipe out time-dependent emissions

Parameters

- Nodal masses and thermal properties
- Constituent conversion efficiencies indexed by temperature

or

- Constituent conversion efficiencies equation coefficients

ADVISOR Sample Results

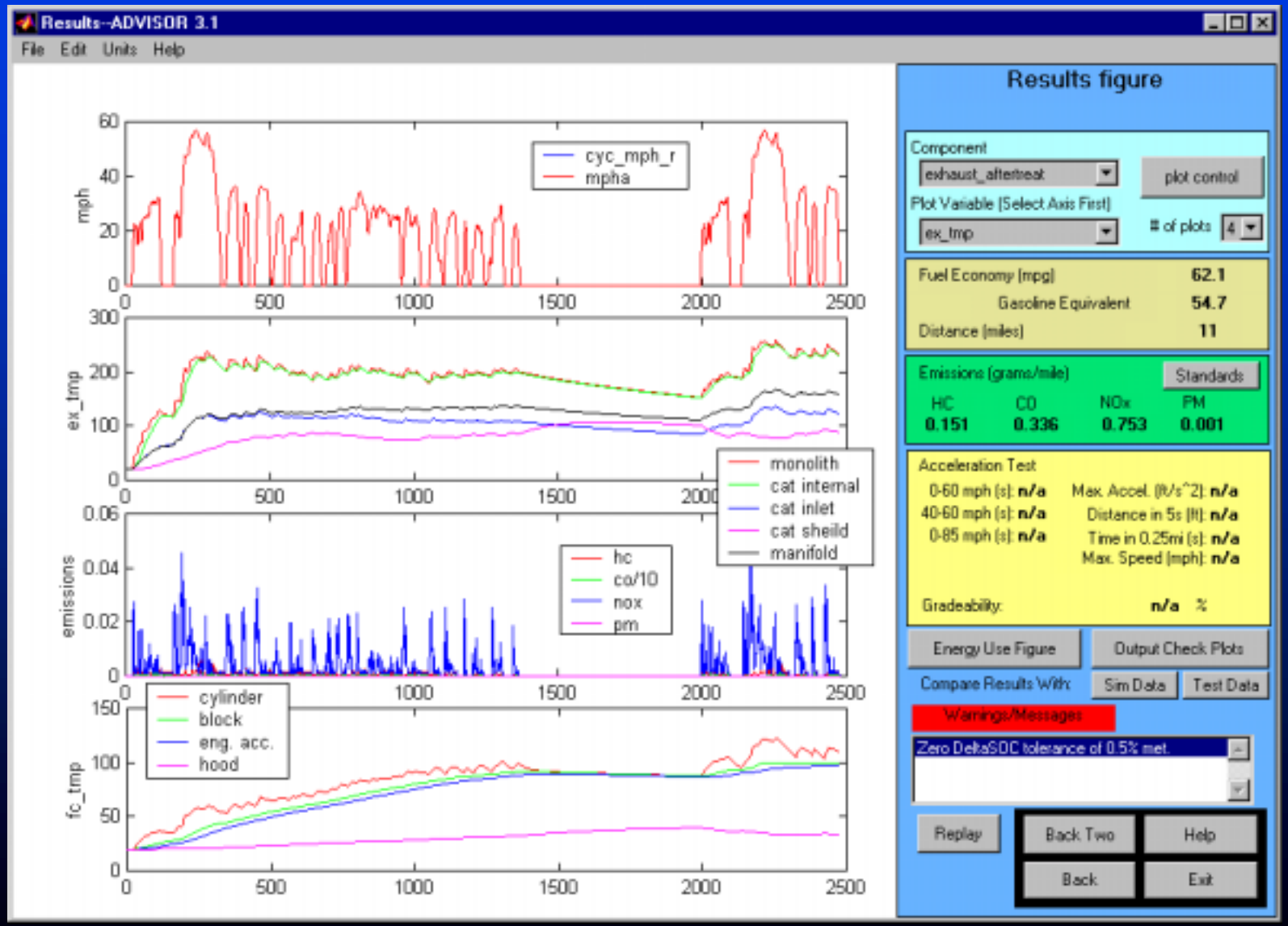

Outline

- Overview of Existing DOE Vehicle Systems Models
- Details of Engine and Emission Control Models
  - ADVISOR
  - PSAT
- Future Modeling Pathways

Emission Modeling Work At ANL

- Existing models
  - Look-up table based models
  - Modal and Energy Emission Modeling (MEEM)
  - Neural Network Engine Modeling
- Future Development
  - Integration of ORNL emission models
  - Neural Network Emission System Modeling
  - Physiological 1D engine models (SI and CI) and Emission System

PSAT Engine Out Emissions (map-based)

- Interpolation between hot and cold emissions index tables
- Warm-up index based on set of time constants

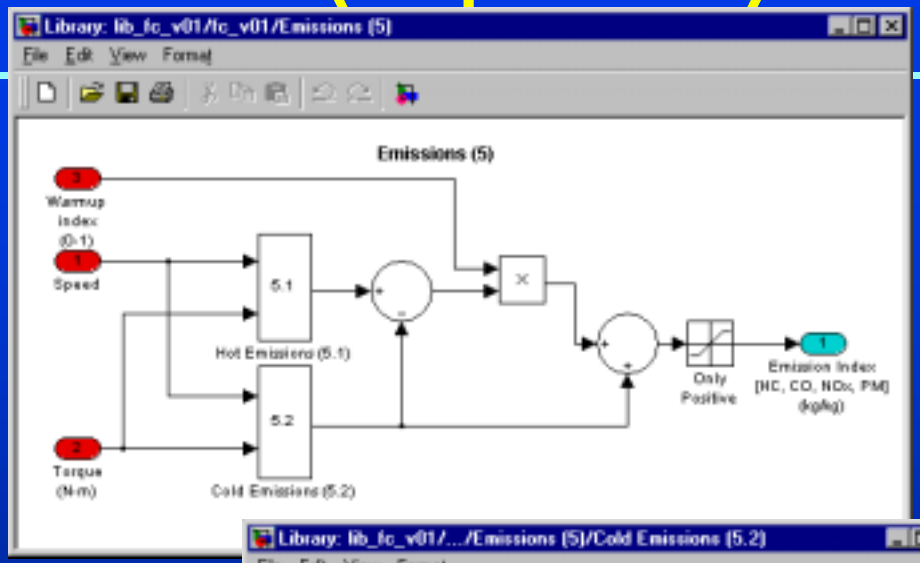

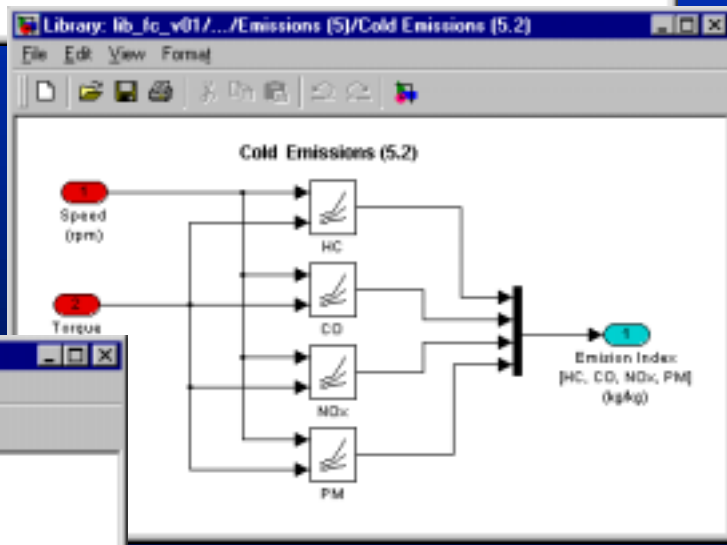

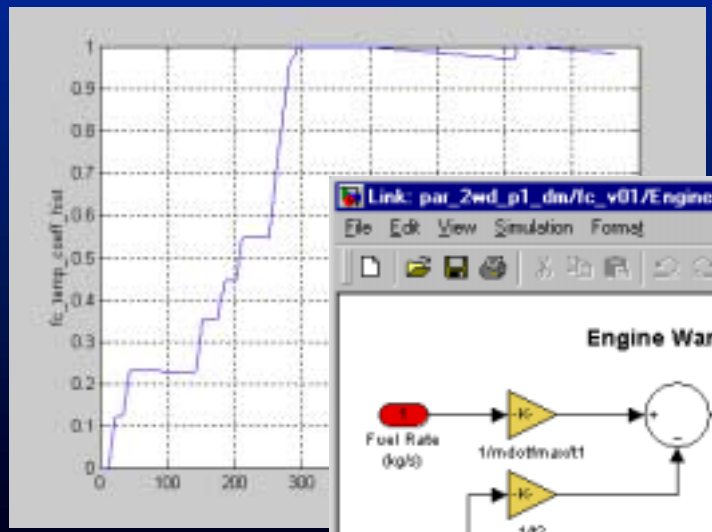

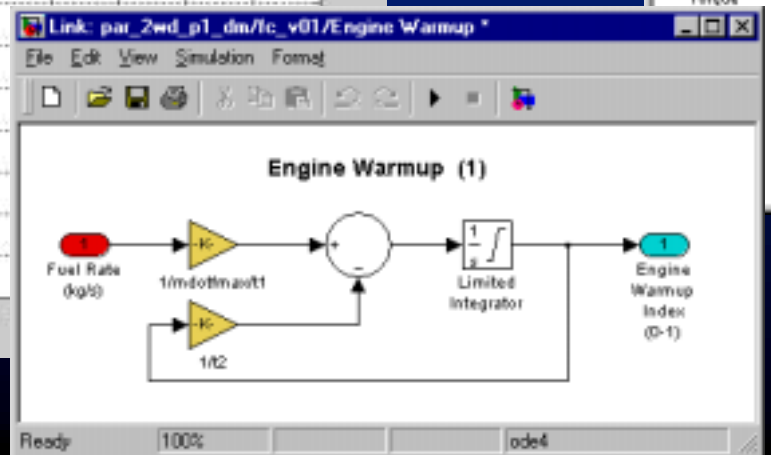

PSAT - Emissions Control Model (map-based)

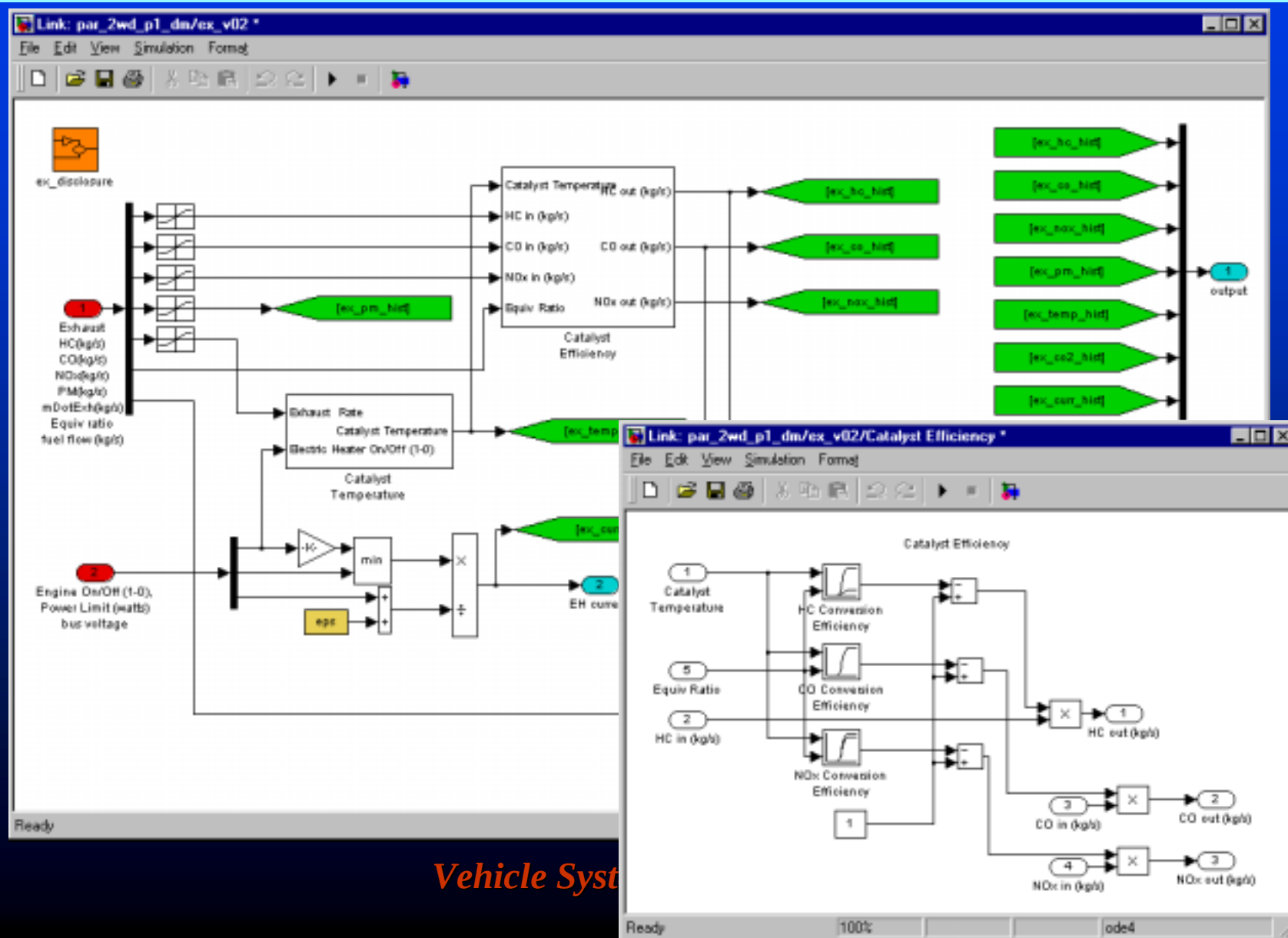

Vehicle Syst

Modal Energy And Emission Model (MEEM)

- MEEM is a physical, power-demand model based on parameterized analytical representation of emissions production
- Result of a multi-year, multi-million dollar program carried out by the Univ. of California Riverside and University of Michigan (NCHRP Project 25-11)
- Engine and after-treatment models were calibrated based on emission testing of 350 real-world vehicles
- The model recently converted to Simulink and integrated into PSAT

MEEM Structure

- The Model is composed of four individual modules:
  - fuel/air equivalence ratio module
  - fuel-rate module
  - engine-out emissions module
  - catalyst pass fraction module
- MEEM includes four operating conditions:
  - variable soak time start
  - hot-stabilized, stoichiometric operation
  - enrichment operation
  - enleanment operation

PSAT MEEM Simulink Block

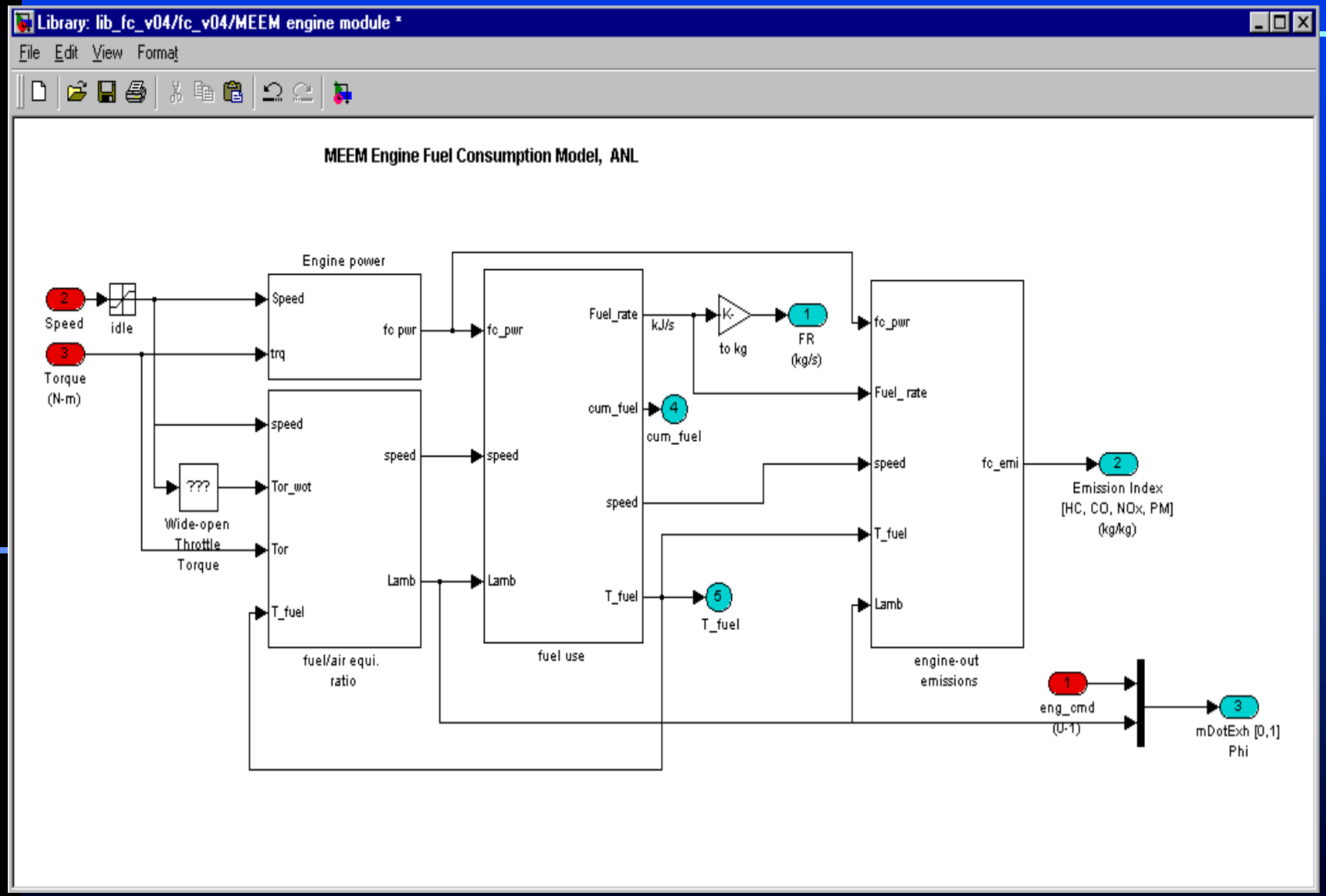

PSAT MEEM Modules

Fuel Rate Module

Engine Speed N(t)
Power demand P(t)
Air/Fuel ratio ϕ(t)

Engine size V
Engine efficiency η
Friction factor k0

$$FR(t) \approx \phi(t) \cdot (k(t) \cdot N(t) \cdot V + \frac{P(t)}{\eta}) \cdot \frac{1}{44}$$

$$k(t) \approx k_0 * [1 + (N(t) - 33)^2 * 10^{-4}](kJ/(rev * liter)).$$

$$k_{idle} \approx 1.5 * k_0$$

FR(t)

Fuel/air Equivalence Ratio Module

Engine Power Demand P(t)

Power Enrichment Threshold Pth

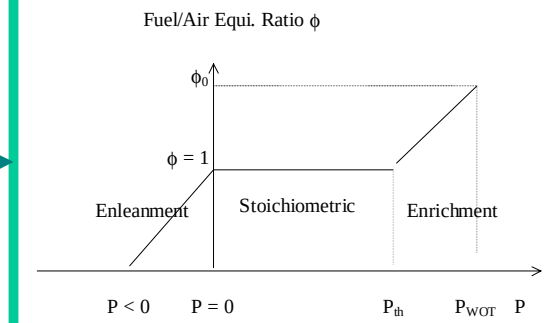

Air/Fuel ratio ϕ(t)

Engine-Out Emissions Module

FR(t), ϕ(t)

Engine out Emission Indexes - Calibrated Parameters

Hot-Stabilized Engine-Out Emissions

Engine-out CO Emissions

$$ECO \approx [C_0 * (1 - \phi^{-1}) + a_{CO}]FR$$

Engine-out HC Emissions

$$EHC \approx a_{HC} \bullet FR + r_{HC}$$

Engine-out NOx Emissions

$$ENOx = a_{1NOx} * (FR - FR_{NOxth}), \phi < 1.05$$

$$ENOx = a_{2NOx} * (FR - FR_{NOxth}), \phi \geq 1.05$$

Engine out Emissions
ECO
EHC
ENOx

Catalyst Pass Fractions

FR(t), ϕ(t), ENO(t)

CPF Coefficients – Calibrated Parameters

Hot-Stabilized Operation

CPF CO and HC

$$CPF(i) = 1 - \Gamma_i \bullet \exp[(-b_i \cdot a_i - c_i \cdot (1 - \phi^{-1})) \cdot FR], \ \phi \geq 1$$

$$CPF\ (i) = 1 - \Gamma_i\ ,\ \ \phi < 1$$

$$i = CO, HC$$

CPF NOx Function

$$Cat_Eff_{NOx} = \begin{cases} (1 - b_{NO} \cdot ENO) \cdot \Gamma_{NO}, \ldots\ldots\ldots\ldots\ldots\ldots \phi = 1.0 \\ [1 - b_{NO} \cdot ENO - c_{NO} \cdot (1 - \phi^{-1}) \cdot ENO] \cdot \Gamma_{NO}, \ldots\ldots \phi > 1.0 \\ (\Gamma_{NO} - c_{NO})/(1 - \phi_{\min}) \cdot (\phi - \phi_{\min}) + c_{NO}, \ldots\ldots\ldots \phi < 1.0 \end{cases}$$

Tailpipe Emissions:
CO
HC
NOx

MEEM Soak Time Operation

Air/Fuel Ratio:

$T_{su}(t)$ ~ surrogate threshold temp.

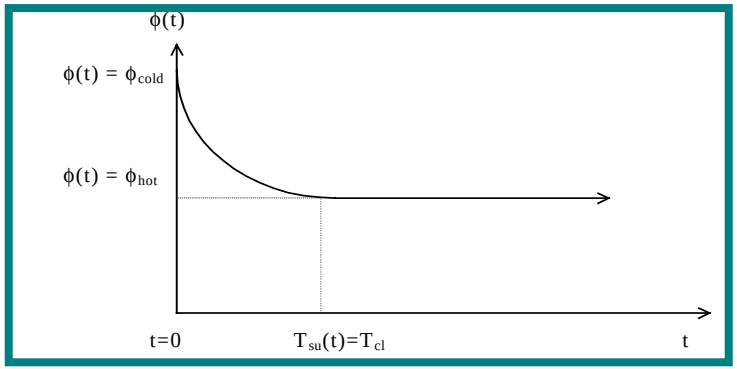

Engine-out Emissions Multipliers:

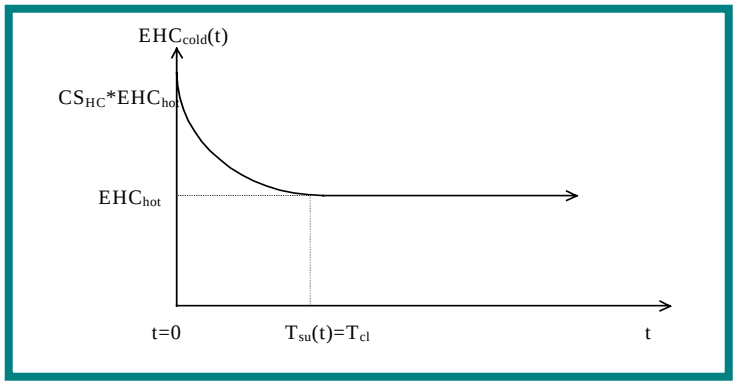

Catalyst Efficiency:

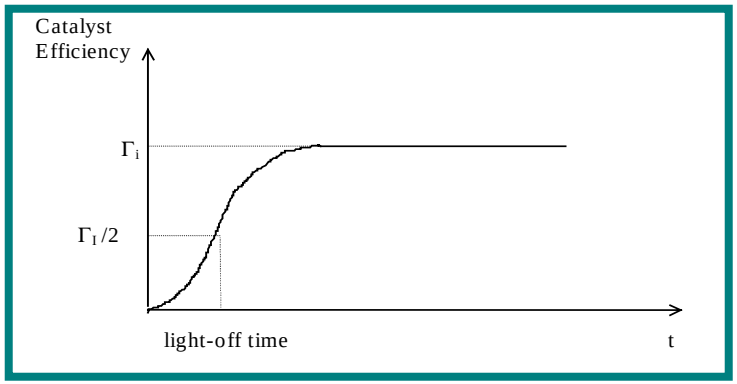

MEEM Model Vehicle Fuel Consumption Validation using PSAT - Taurus

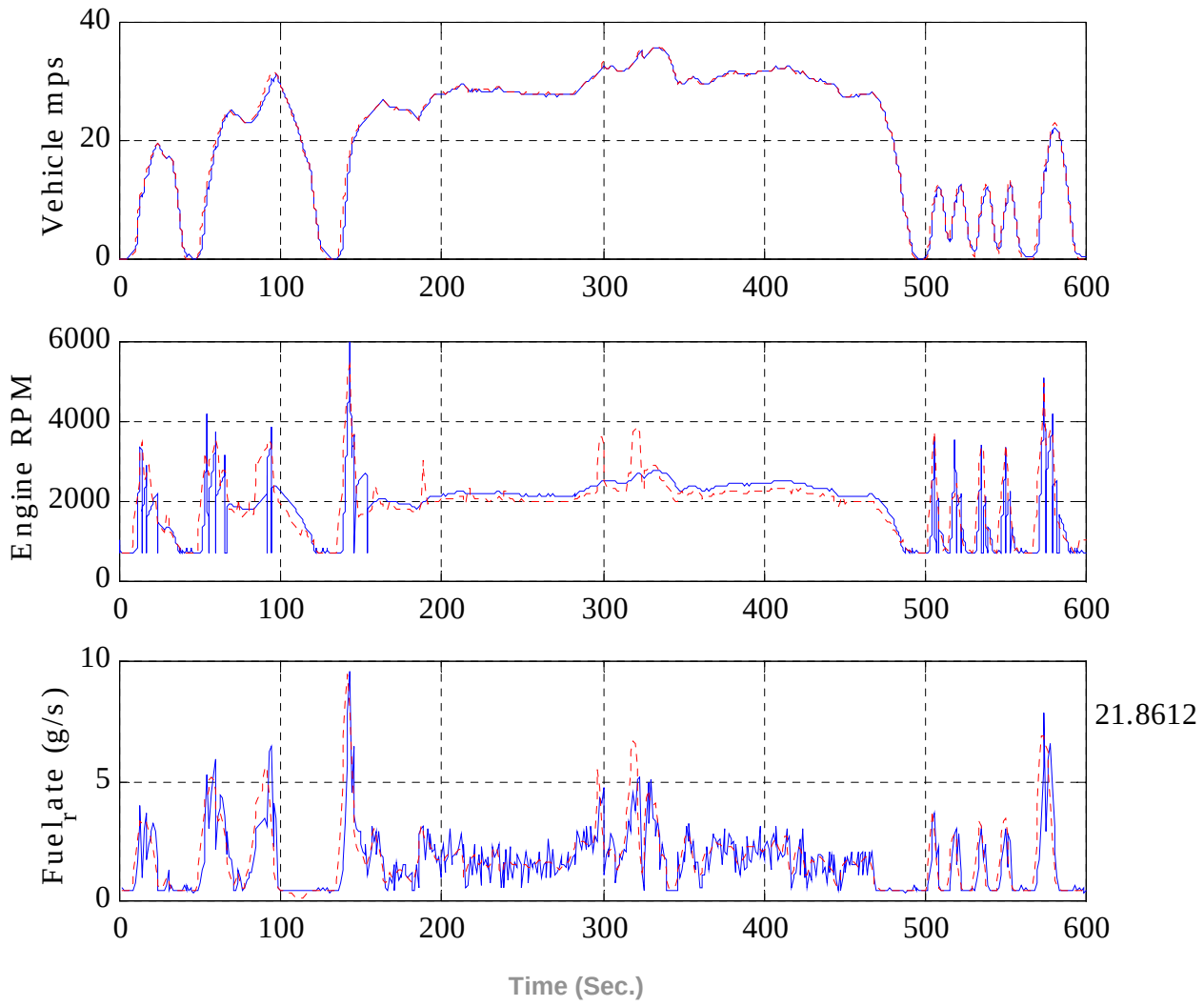

US06 Cycle

Test/Simulated Consumptions: 22.9 / 22.6 mpg

Blue= modeling
Red=testing

MEEM model has been used

MEEM Model Engine Out Emissions Validation using PSAT - Taurus

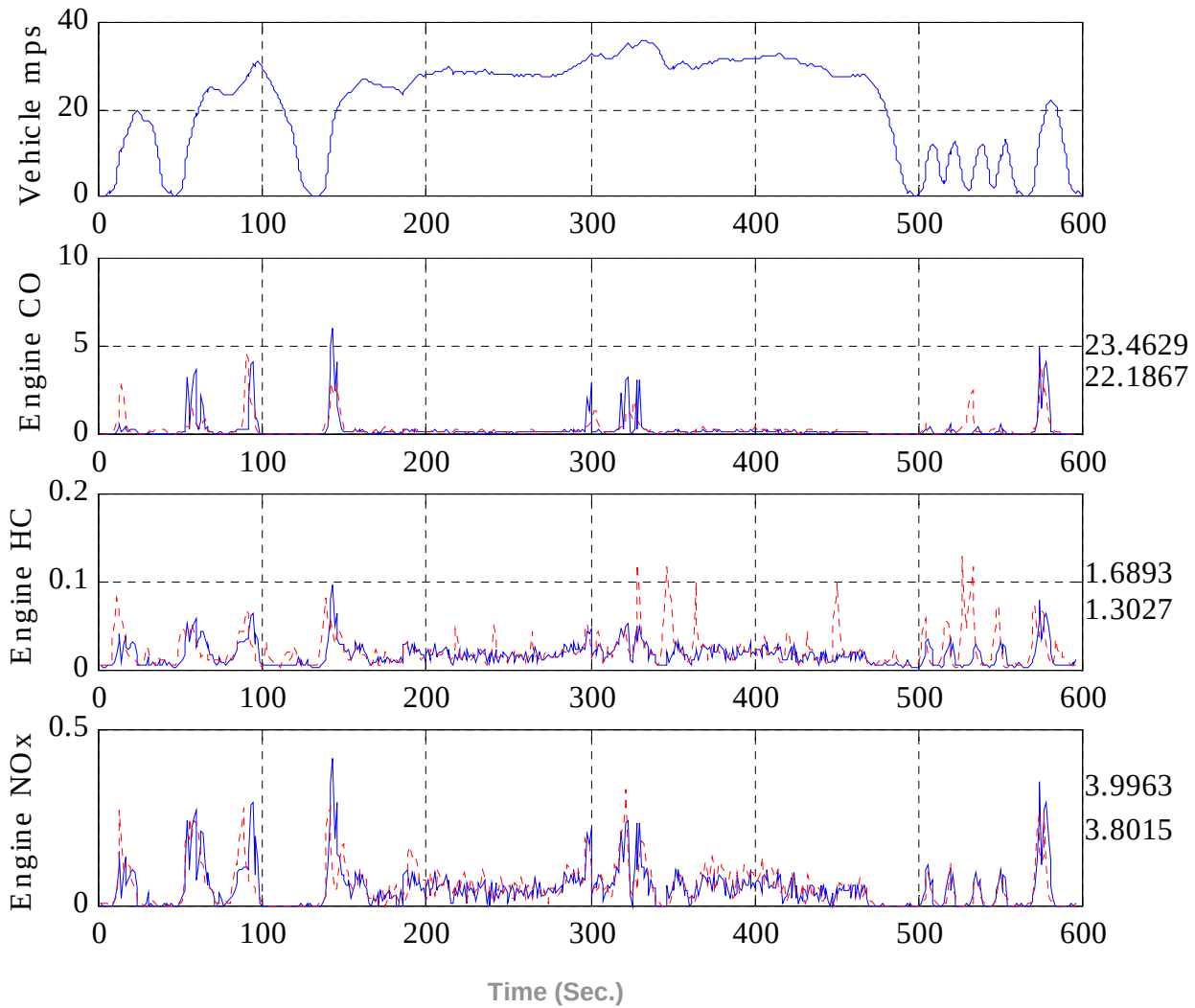

US06 Cycle

Pre-catalyst emissions

Blue= modeling
Red=testing

MEEM model has been used

Prius Engine Modeling With Neural Network

- ANL Neural Network Approach to Engine Modeling Utilizes:
  - Neural network based modules
    - Are suitable for dynamic and non-linear problems
    - Need no underlying empirical equations
    - Are entirely data driven
- Trained with data from Japan Prius tested in ANL Advanced Powertrain Test Facility (APTF)

Overview Of PSAT NN Prius Engine Model

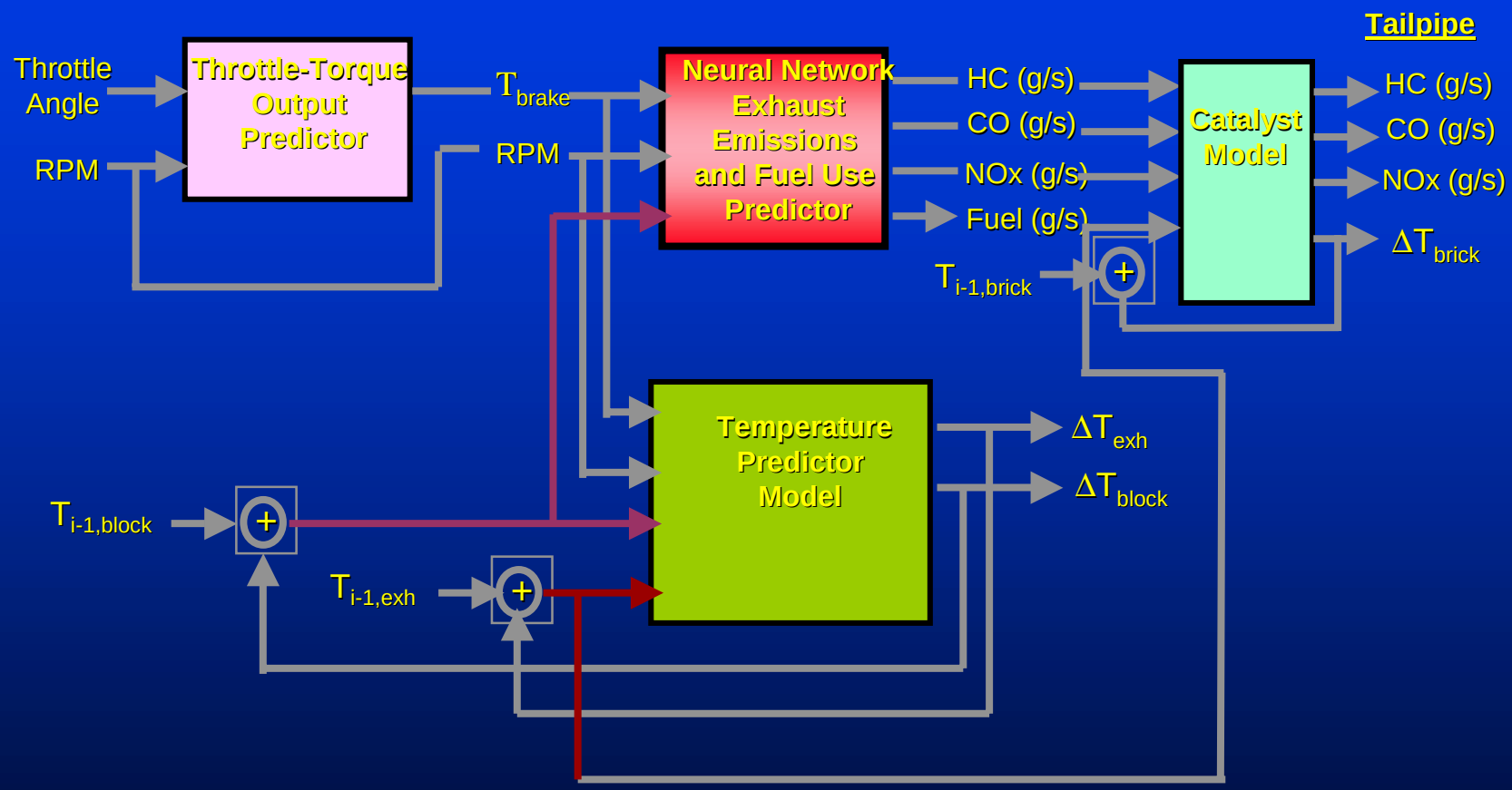

T_{block} = Engine Block Temperature, T_{exh}= Engine Exhaust Temperature, T_{brick} = Catalyst Brick Temperature,

τ = Torque **i-1** = last time step

Power Output for Hot Federal Highway

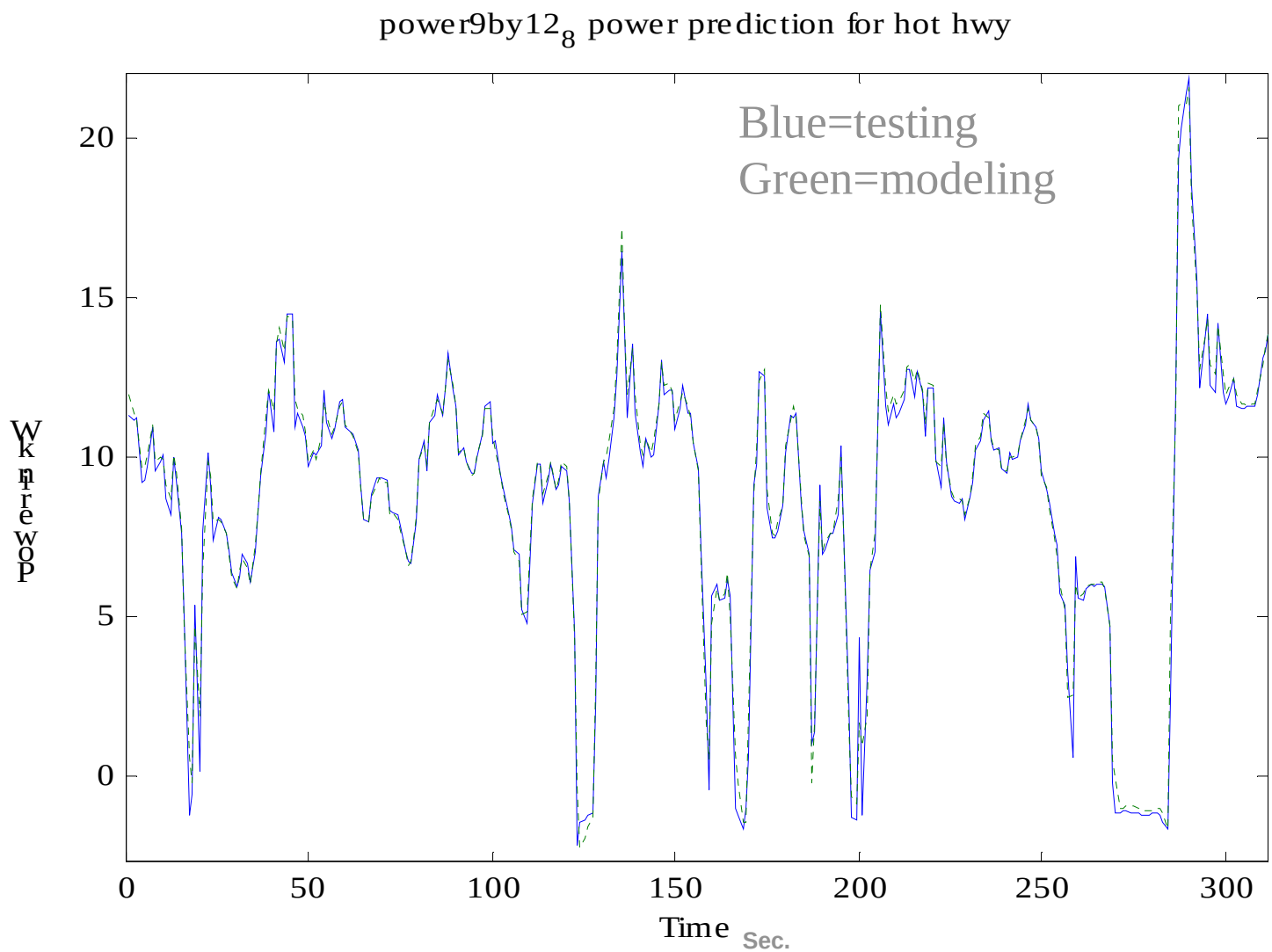

HC Output Plot For Cold FTP

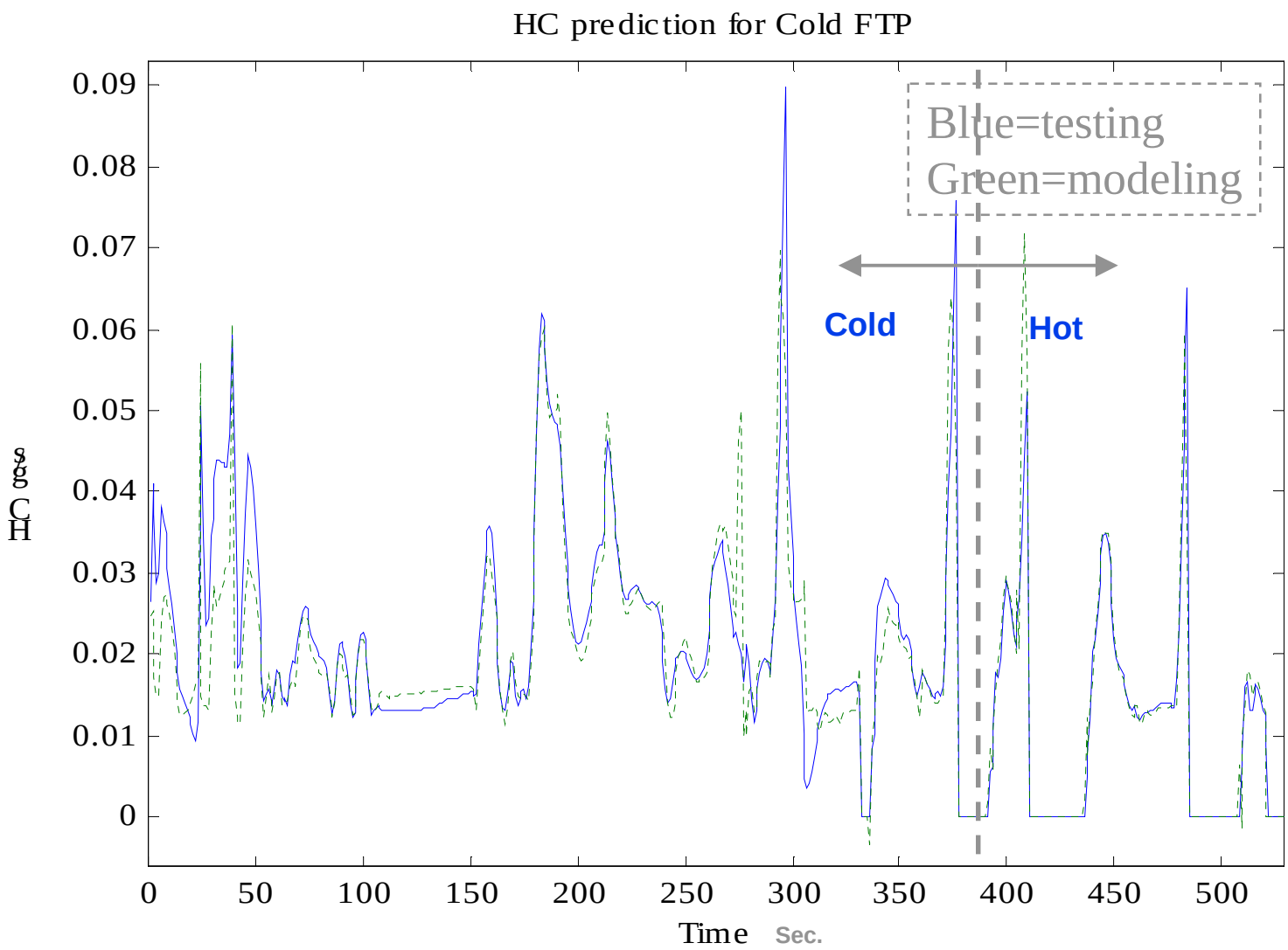

Outline

- Overview of Existing DOE Vehicle Systems Models
- Details of Engine and Emission Control Models
  - ADVISOR
  - PSAT
- Future Modeling Pathways

Conclusions

- DOE supports the development of multiple modeling tools
- Several options for modeling engine out emissions and emissions control devices currently exist
- Models of greater complexity likely necessary for advanced analysis
- Simulink allows simple integration of models of varying levels of complexity

Future Modeling Paths

- Connection to detailed engine model for improved engine out predictions
- Emissions control feedback effects on engine performance
- More detailed emissions control device models
- Fuel effects on both engine out and emissions control device performance